Further Information

Diameter (d)	Pitch	dk	k	Drive
M1.6	0.35	3.20-2.90	1.42-1.16	#0
M2	0.40	4.00-3.70	1.72-1.46	#0
M2.5	0.45	5.00-4.70	2.12-1.88	#1
M3	0.50	6.00-5.30	2.52-2.26	#1
M3.5	0.60	7.00-6.64	2.82-2.46	#2
M4	0.70	8.00-7.64	3.25-2.92	#2
M5	0.80	10.00-9.14	3.95-3.62	#2
M6	1.00	12.00-11.57	4.75-4.30	#3
M8	1.25	16.00-15.57	6.15-5.70	#4
M10	1.50	20.00-19.48	7.68-7.14	#4

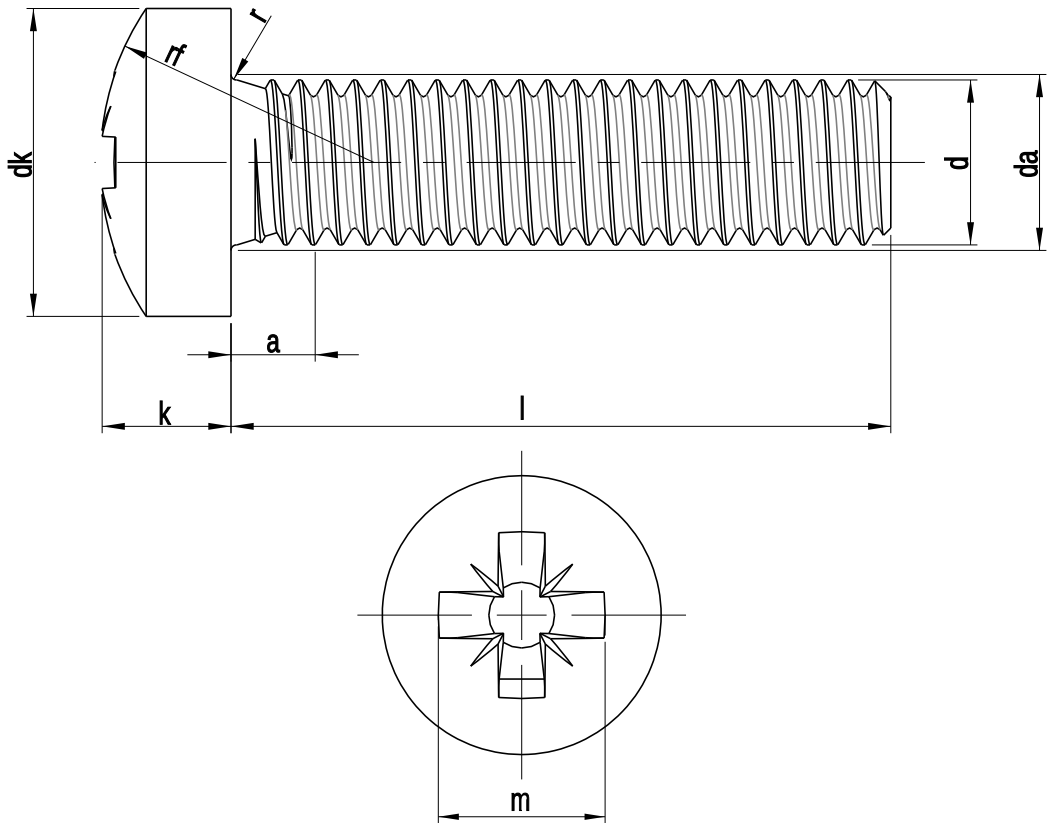

PRECISION TECHNOLOGY SUPPLIES Stainless Steel Industrial Fastenings & Precision Turned Parts	Part No. A79850206A4
www.pts-uk.com +44 (0)1342 410758	M2 X 6 POZI PAN MACHINE SCREW DIN 7985Z A4 STAINLESS STEEL
Information in this drawing is provided for reference only	