Further Information

Diameter (d)	Pitch	s	k	n (min)	t (min)
M3	0.50	5.50-5.32	2.12-1.88	0.80	1.00
M4	0.70	7.00-6.64	3.00-2.60	1.06	1.12
M5	0.80	8.00-7.64	3.74-3.26	1.28	1.40
M6	1.00	10.00-9.64	4.24-3.76	1.66	1.60
M8	1.25	13.00-12.57	5.54-5.06	2.06	2.12
M10	1.50	17.00-16.57	6.69-6.11	2.50	2.50

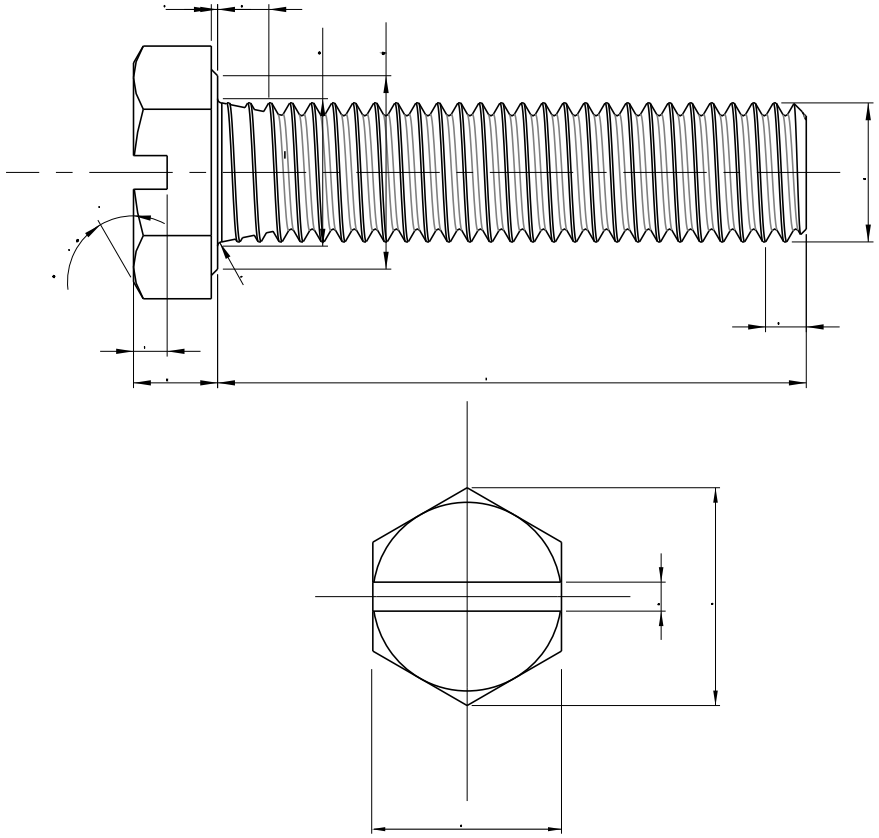

PRECISION TECHNOLOGY SUPPLIES Stainless Steel Industrial Fastenings & Precision Turned Parts	Part No. A933S06060A4
www.pts-uk.com +44 (0)1342 410758	M6 X 60 SLOTTED HEXAGON HEAD SET SCREW DIN 933SZ A4-70 STAINLESS STEEL
Information in this drawing is provided for reference only	