Further Information

Diameter (d)	Pitch	s	m (min)	h2
M4	0.70	7.00-6.78	2.90	9.90-9.30
M5	0.80	8.00-7.78	4.40	10.85-10.15
M6	1.00	10.00-9.78	4.90	12.35-11.65
M8	1.25	13.00-12.73	6.44	14.35-13.65
M10	1.50	17.00-16.73	8.04	18.50-17.70
M12	1.75	19.00-18.67	10.37	22.90-22.10
M16	2.00	24.00-23.67	14.10	27.90-27.10

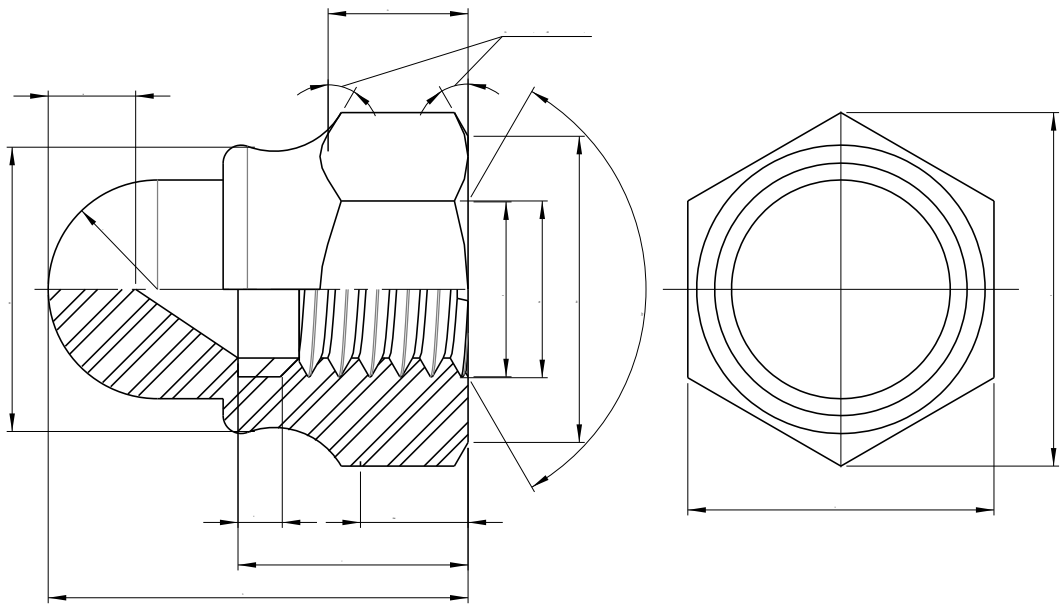

PRECISION TECHNOLOGY SUPPLIES Stainless Steel Industrial Fastenings & Precision Turned Parts	Part No. A98612
www.pts-uk.com +44 (0)1342 410758	M12 NYLON INSERT DOME NUT DIN 986 A2 STAINLESS STEEL
Information in this drawing is provided for reference only	