Further Information

Thread	T.P.I UNC	T.P.I UNF	w	h	p
4	40	48	0.250	*	0.250
5	40	44	0.250	*	0.250
6	32	40	0.312	0.171	0.296
8	32	36	0.312	0.171	0.312
10	24	32	0.375	0.203	0.390
12	24	28	0.375	0.203	0.421
1/4	20	28	0.437	0.234	0.468
5/16	18	24	0.562	0.281	0.531
3/8	16	24	0.625	0.312	0.625
7/16	14	20	0.625	0.343	0.718
1/2	13	20	0.750	0.421	0.812
5/8	11	18	1.000	0.531	0.984
3/4	10	16	1.062	0.593	1.187

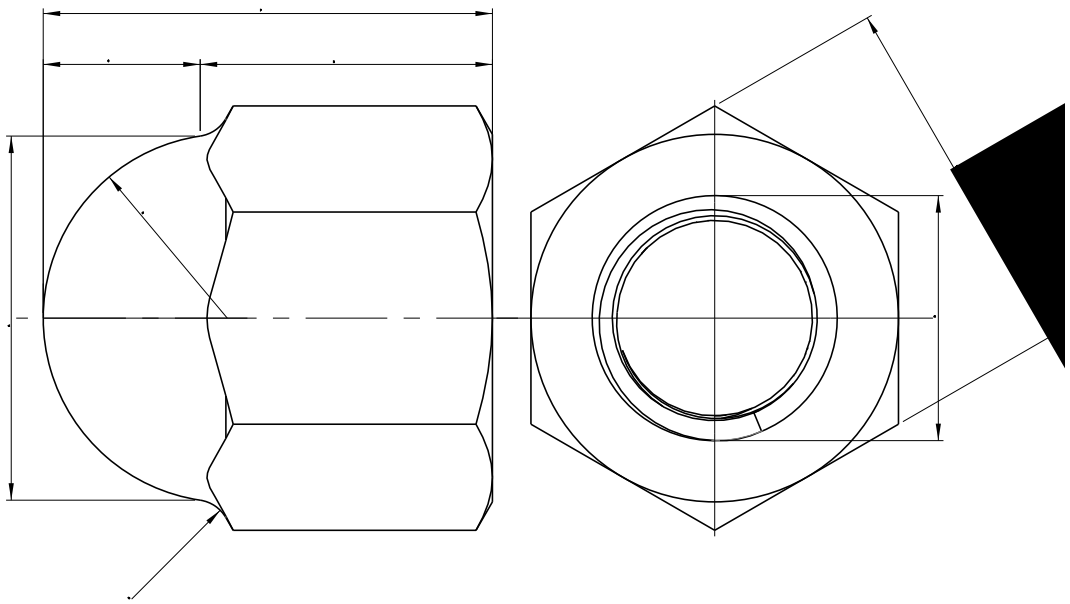

PRECISION TECHNOLOGY SUPPLIES Stainless Steel Industrial Fastenings & Precision Turned Parts	Part No. U15871420
www.pts-uk.com +44 (0)1342 410758	1/4-20 UNC DOME NUT SAE J483A A2 STAINLESS STEEL
Information in this drawing is provided for reference only	