Further Information

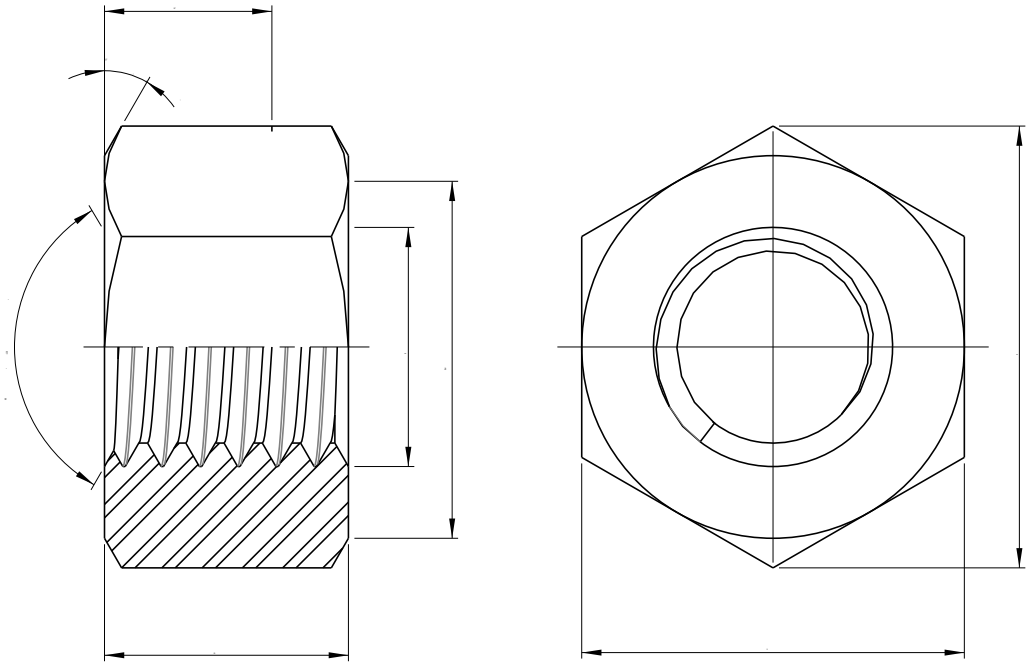

PRECISION TECHNOLOGY SUPPLIES Stainless Steel Industrial Fastenings & Precision Turned Parts	Part No. U85B14282000
www.pts-uk.com +44 (0)1342 410758	1/4-28 UNF X 2 SLOT BINDING MACHINE SCREW ASME B18.6.3 A2 STAINLESS STEEL
Information in this drawing is provided for reference only	