Further Information

Thread	T.P.I UNC	T.P.I UNF	a	o	j (max)	t (max)
2	56	64	0.181-0.171	0.050-0.043	0.031	0.030
3	48	56	0.208-0.197	0.059-0.052	0.035	0.036
4	40	48	0.235-0.223	0.068-0.061	0.039	0.042
5	40	44	0.263-0.249	0.078-0.069	0.043	0.048
6	32	40	0.290-0.275	0.087-0.078	0.048	0.053
8	32	36	0.344-0.326	0.105-0.095	0.054	0.065
10	24	32	0.399-0.378	0.123-0.112	0.060	0.077
1/4	20	28	0.525-0.498	0.165-0.152	0.075	0.105
5/16	18	24	0.656-0.622	0.209-0.209	0.084	0.134
3/8	16	24	0.788-0.746	0.253-0.235	0.094	0.163

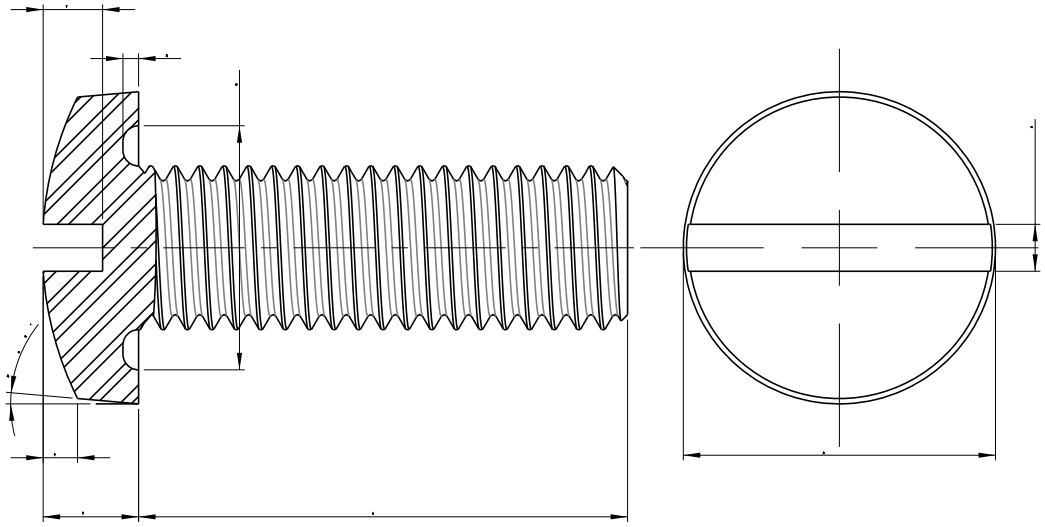

PRECISION TECHNOLOGY SUPPLIES
Stainless Steel Industrial Fastenings & Precision Turned Parts

Part No. U85B2560125

www.pts-uk.com
+44 (0)1342 410758

2-56 UNC X 1/8 SLOT BINDING MACHINE SCREW ASME B18.6.3 A2 STAINLESS STEEL

Information in this drawing is provided for reference only