Further Information

Thread	T.P.I UNC	T.P.I UNF	a	h	j (max)	t (max)
2	56	64	0.162-0.146	0.069-0.059	0.031	0.048
3	48	56	0.187-0.169	0.078-0.067	0.035	0.053
4	40	48	0.211-0.193	0.086-0.075	0.039	0.058
5	40	44	0.236-0.217	0.095-0.083	0.043	0.063
6	32	40	0.260-0.240	0.103-0.091	0.048	0.068
8	32	36	0.309-0.287	0.120-0.107	0.054	0.077
10	24	32	0.359-0.334	0.137-0.123	0.060	0.087
1/4	20	28	0.472-0.443	0.175-0.160	0.075	0.109
5/16	18	24	0.590-0.557	0.216-0.198	0.084	0.132
3/8	16	24	0.708-0.670	0.256-0.237	0.094	0.155

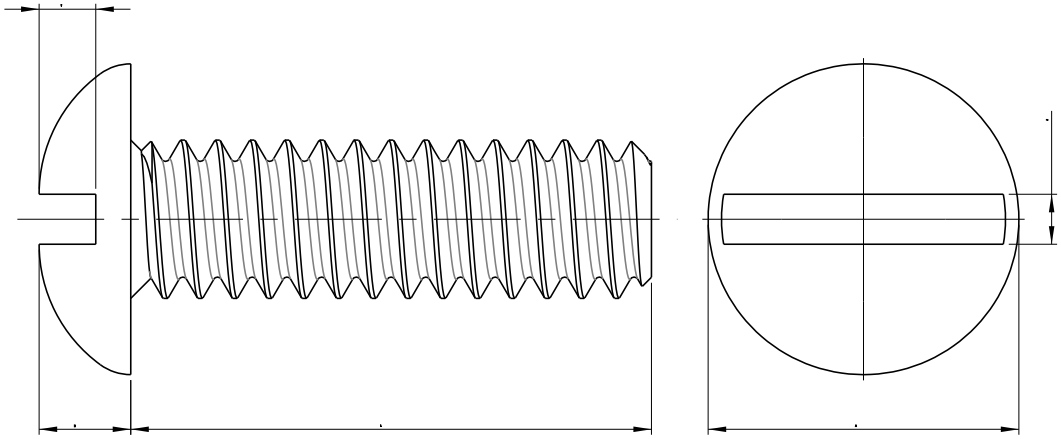

PRECISION TECHNOLOGY SUPPLIES Stainless Steel Industrial Fastenings & Precision Turned Parts	Part No. U85R14280375
www.pts-uk.com +44 (0)1342 410758	1/4-28 UNF X 3/8 SLOT ROUND MACHINE SCREW ASME B18.6.3 A2 STAINLESS STEEL
Information in this drawing is provided for reference only	