Further Information

Thread	T.P.I UNC	T.P.I UNF	f (max)	h (max)
0	*	80	0.156	0.050
1	64	72	0.156	0.050
2	56	64	0.188	0.066
3	48	56	0.188	0.066
4	40	48	0.250	0.098
5	40	44	0.312	0.114
6	32	40	0.312	0.114
8	32	36	0.344	0.130
10	24	32	0.375	0.130
12	24	28	0.438	0.161
1/4	20	28	0.438	0.226
5/16	18	24	0.500	0.273
3/8	16	24	0.562	0.337
7/16	14	20	0.688	0.385
1/2	13	20	0.750	0.448
9/16	12	18	0.875	0.496
5/8	11	18	0.938	0.559
3/4	10	16	1.125	0.665
7/8	9	14	1.312	0.776
1"	8	12	1.500	0.887
1.1/8"	7	12	1.688	0.999
1.1/4"	7	12	1.875	1.094
1.3/8"	6	12	2.062	1.206
1.1/2"	6	12	2.250	1.317
1.3/4"	5	8	2.625	1.500
2"	4.1/2	8	3.000	1.718

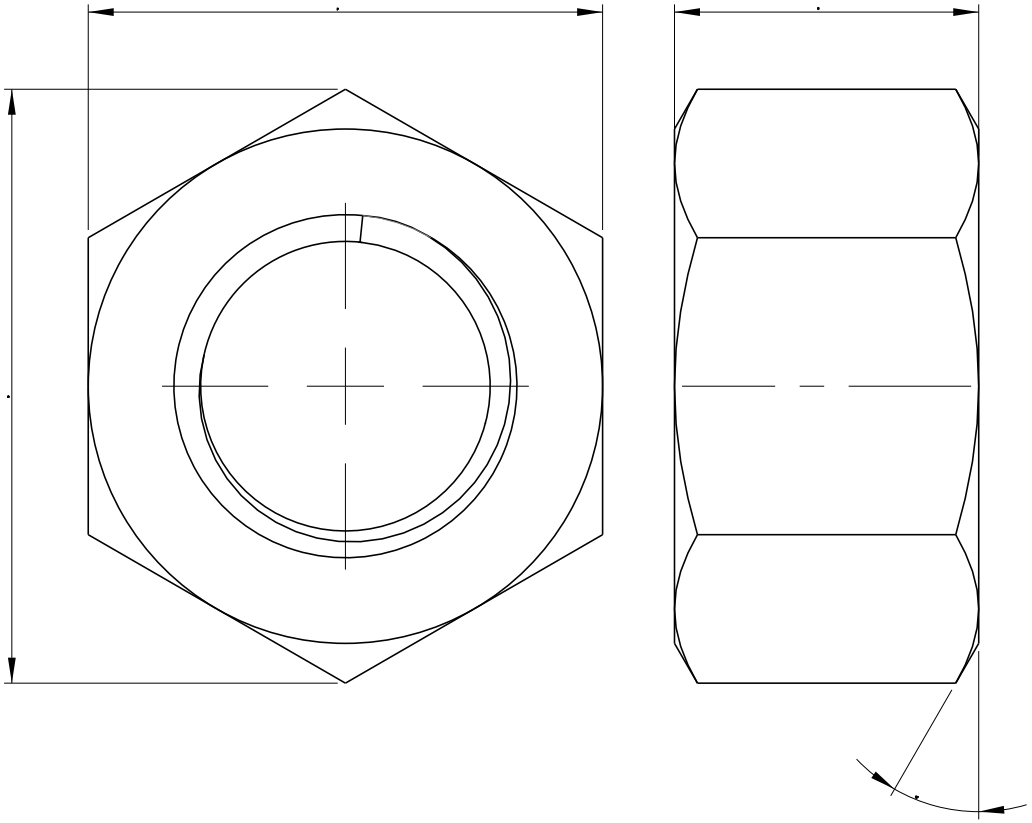

PRECISION TECHNOLOGY SUPPLIES
Stainless Steel Industrial Fastenings & Precision Turned Parts

Part No. U9341428

www.pts-uk.com
+44 (0)1342 410758

1/4-28 UNF HEXAGON FULL NUT
ASME B18.2.2 A2 STAINLESS STEEL

Information in this drawing is provided for reference only